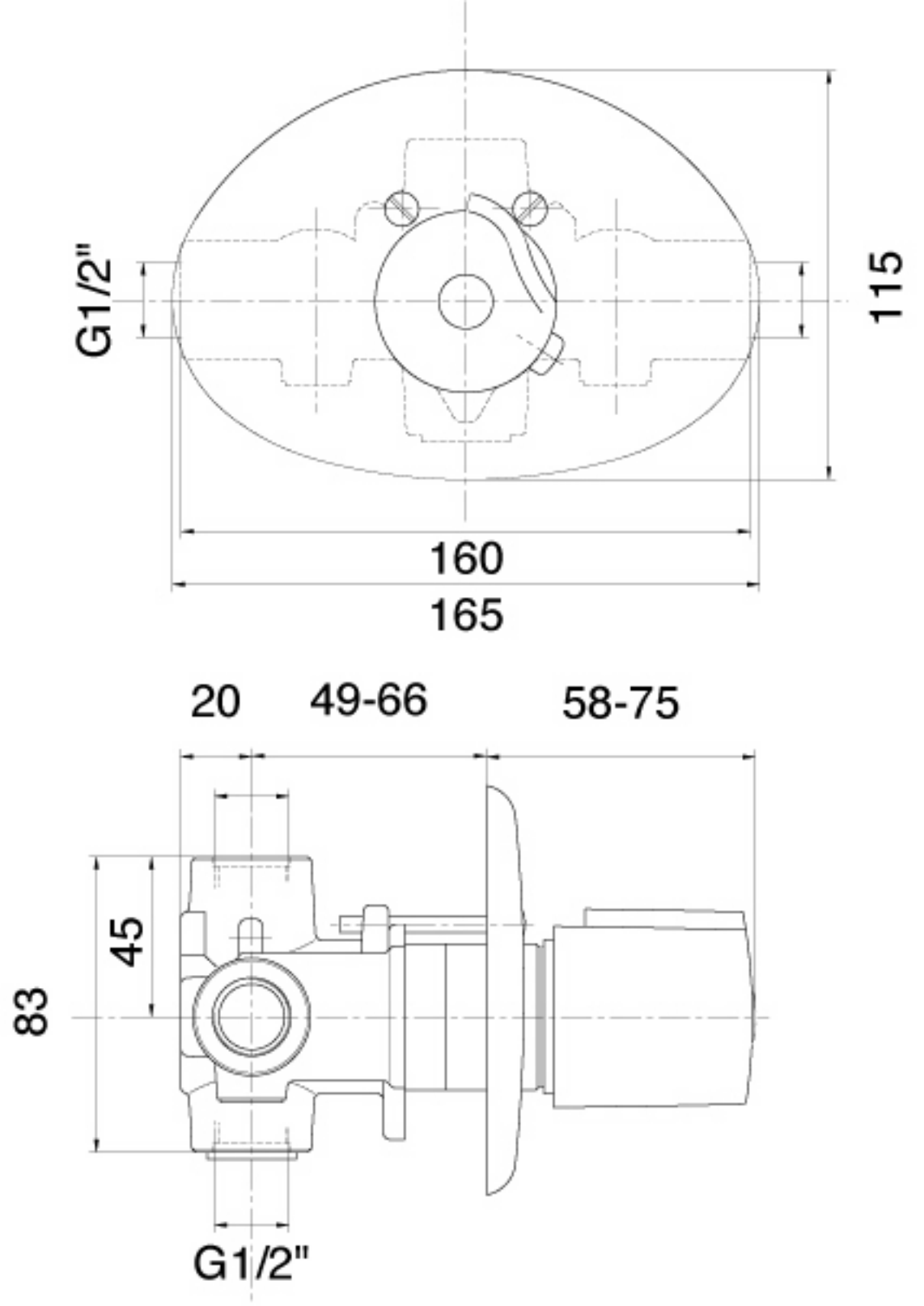
G1/2"
115
160
165
20
49-66
58-75
45
83
G1/2"