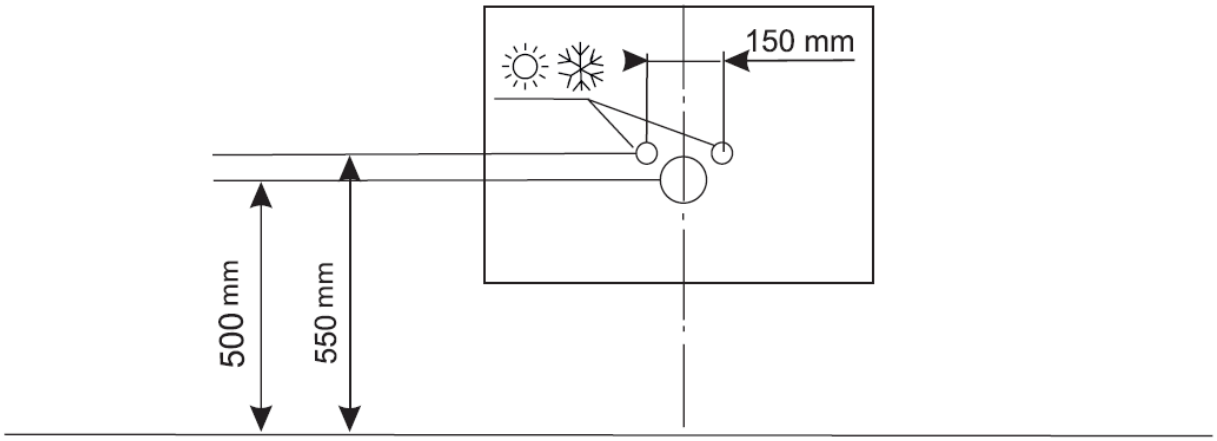
500 mm
550 mm
150 mm